Parameter	Symbol	Value	Unit
μ			

Parameter	Symbol	Conditions	Min	Typ	Max	Unit

FIG.3: Pulse derating curve

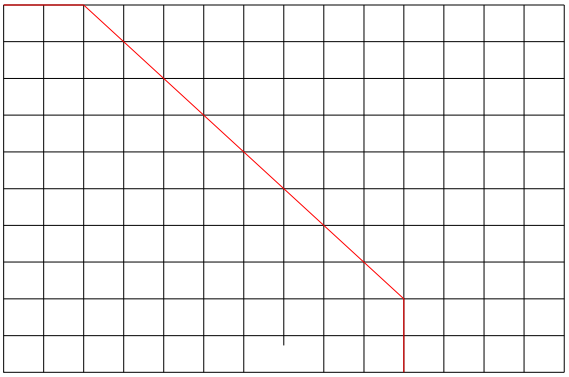

FIG.4: ESD clamping

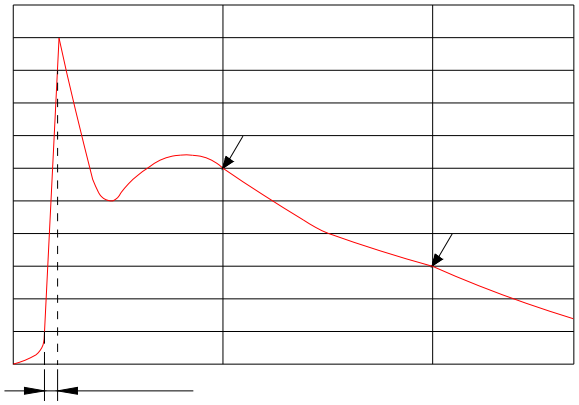

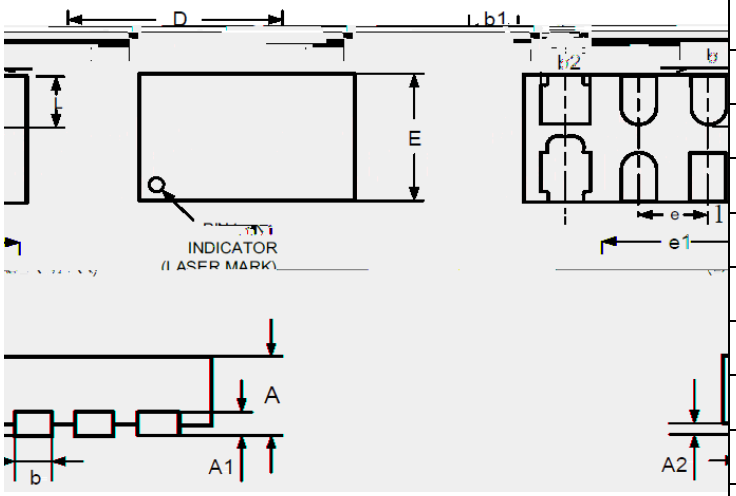

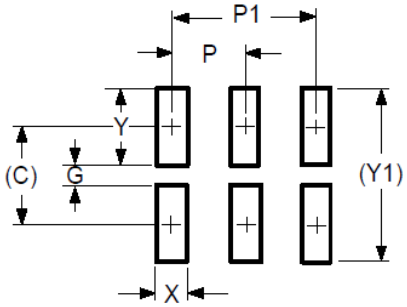

Symbol	Millimeters		Inches	
	Min.	Max.	Min.	Max.

- -

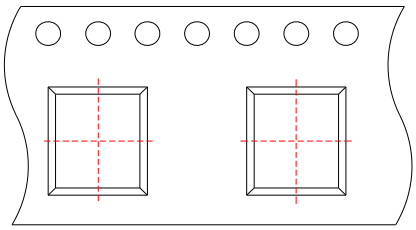

Symbol	Millimeters	Inches
	Typ.	Typ.
	Φ	Φ

JEU0522P for ESD Protection